EYP-BAL-0808-00005-2013-SOT12-0010

BROAD AREA LASER

GaAs Semiconductor Laser Diode
Single Emitter Structure

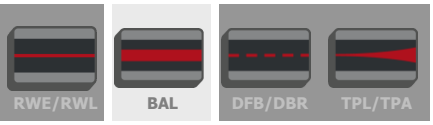

General Product Information

Product	Application
808 nm Broad Area Laser	Sensing
for Pulse Mode Operation	
sealed TO Housing	



Absolute Maximum Ratings

	Symbol	Unit	min	typ	max	
Storage Temperature	T_S	°C	-40		85	Every condition of the Absolute Maximum Ratings has to be kept during operation
Operational Temperature at Case	T_C	°C	-20		65	
Peak Current	$I_{F\ Peak}$	A			8	see Pulse Mode Conditions
Reverse Voltage	V_R	V			0	
Peak Output Power	$P_{opt\ Peak}$	W			7	see Pulse Mode Conditions
Forward Voltage at Peak	V_F	V			2.7	see Pulse Mode Conditions

Recommended Operational Conditions (Pulse Mode)

	Symbol	Unit	min	typ	max	Measurement Conditions / Comments
Operational Temperature at Case	T_C	°C	15		40	
Forward Current	$I_{F\ Peak}$	A			8	see Pulse Mode Conditions
Output Power	$P_{opt\ Peak}$	W		6		see Pulse Mode Conditions

Characteristics at T_{amb} 25 °C, Pulse Mode, Begin Of Life

Parameter	Symbol	Unit	min	typ	max	Measurement Conditions / Comments
Center Wavelength	λ_C	nm	803	808	815	see Pulse Mode Conditions
Spectral Width (FWHM)	$\Delta\lambda$	nm		2		
Temperature Coefficient of Wavelength	$d\lambda / dT$	nm / K		0.3		
Peak Output Power @ I_F = 8 A	$P_{opt\ Peak}$	W	5	6		see Pulse Mode Conditions
Threshold Current	I_{th}	A		0.85		
Operational Current @ $P_{opt\ Peak}$ =5 W	I_{op}	A			8	see Pulse Mode Conditions
Differential Series Resistance	R_S	Ω		0.15		

Distributor
amsTECHNOLOGIES
where technologies meet solutions
info@amstechnologies.com
www.amstechnologies-webshop.com
Contact us

EYP-BAL-0808-00005-2013-SOT12-0010

BROAD AREA LASER

GaAs Semiconductor Laser Diode
Single Emitter Structure



Characteristics at T_{amb} 25 °C, Pulse Mode, Begin Of Life

Parameter	Symbol	Unit	min	typ	max	Measurement Conditions / Comments
Cavity Length	L	µm		2000		
Stripe width	Ws	µm		130		
Divergence parallel (FWHM)	$\Theta_{\parallel}$	°	7	10	13	
Divergence perpendicular (FWHM)	$\Theta_{\perp}$	°	25	30	35	
Polarization				TM		E field perpendicular to Pin 2 - Pin 3 - plane
Spectral Mode (longitudinal)				Multi Mode		

Pulse Mode Conditions

Parameter	Symbol	Unit	min	typ	max	Measurement Conditions / Comments
Pulse Length	t_p	µs			5	
Pulse Repetition Rate	RR	s^{-1}			10 000	
Duty Cycle	D	%			5	

© All rights reserved by eagleyard Photonics GmbH. This preliminary data sheet will be electronically administered and is subject to change without notice. Uncontrolled copy when printed.

EYP-BAL-0808-00005-2013-SOT12-0010

BROAD AREA LASER

GaAs Semiconductor Laser Diode
Single Emitter Structure

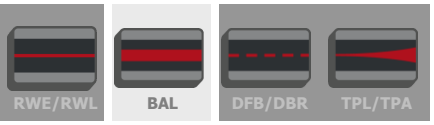

Package Dimensions

Parameter	Symbol	Unit	min	typ	max	Measurement Conditions / Comments
Height of Emission Plane	d_{EP}	mm		3.65		reference plane A: top side of TO header
Excentricity of Emission Center	R	mm			0.12	reference B: center of outer diameter of header
Pin Length	l	mm		14.0		

Package Pinout

Laser Anode (+) connected to case	1
not connected	2
Laser Cathode (-)	3

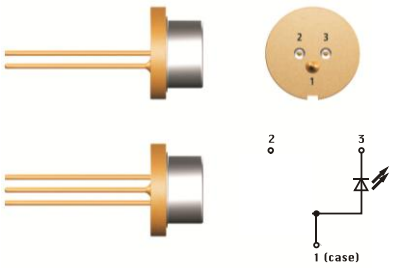

Package Drawings

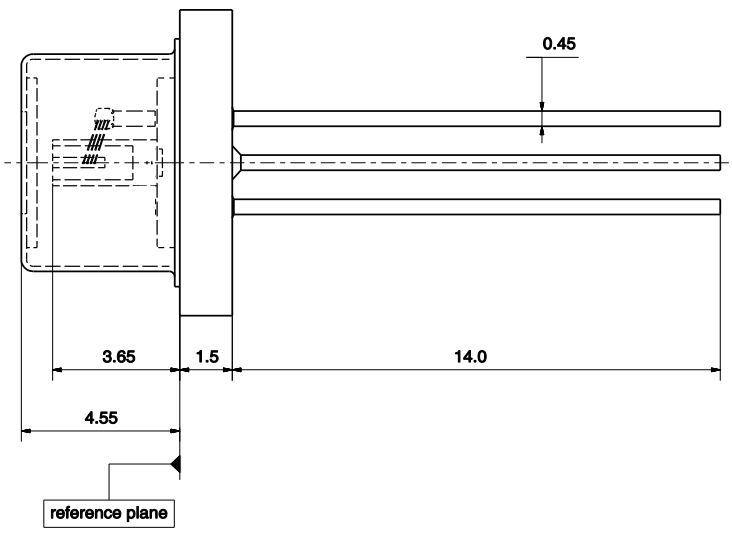

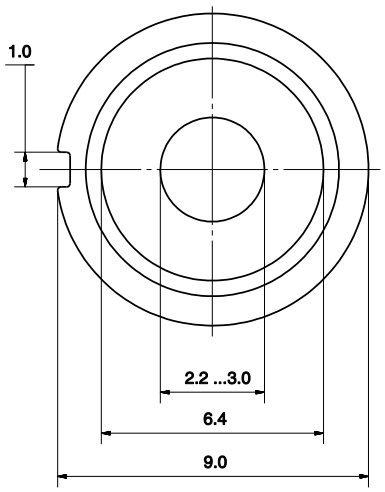

© All rights reserved by eagleyard Photonics GmbH. This preliminary data sheet will be electronically administered and is subject to change without notice. Uncontrolled copy when printed.

EYP-BAL-0808-00005-2013-SOT12-0010

BROAD AREA LASER
GaAs Semiconductor Laser Diode
Single Emitter Structure



Typical Measurement Results

Spectrum

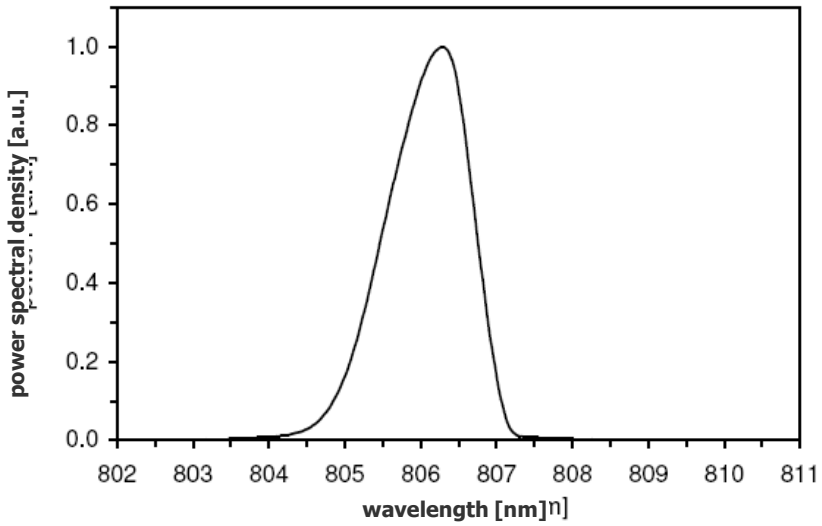

Performance figures, data and any illustrative material provided in this specification are typical and must be specifically confirmed in writing by eagleyard Photonics before they become applicable to any particular order or contract. In accordance with the eagleyard Photonics policy of continuous improvement specifications may change without notice.

Unpacking, Installation and Laser Safety

Unpacking the laser diodes should only be done at electrostatic safe workstations (EPA). Though protection against electro static discharge (ESD) is implemented in the laser package, charges may occur at surfaces. Please store this product in its original package at a dry, clean place until final use. During device installation, ESD protection has to be maintained.

The BAL diode type is known to be sensitive against thermal stress. Operating at moderate temperatures on propper heat sinks willl contribute to a long lifetime of the diode.

The laser emission from this diode is close to the invisible infrared region of the electromagnetic spectrum. Avoid direct and/or indirect exposure to the free running beam. Collimating the free running beam with optics as common in optical instruments will increase threat to the human eye.

Each laser diode will come with an individual test protocol verifying the parameters given in this document.

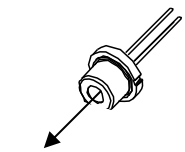
Laser Emission





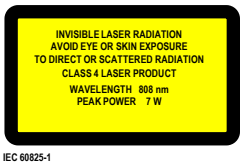

IEC 60825-1





Complies with 21 CFR 1040.10 and 1040.40

Distributor
amsTECHNOLOGIES
where technologies meet solutions
info@amstechnologies.com
www.amstechnologies-webshop.com
Contact us

BROAD AREA LASER

GaAs Semiconductor Laser Diode
Single Emitter Structure

RWE/RWL | BAL | DFB/DBR | TPL/TPA

PRELIMINARY SPECIFICATION

BA Laser

EYP-BAL-0808-08000-4020-CMT04-0000

General Product Information

Product	Application
808 nm Broad Area Laser	Material Processing
mounted on C-Mount	Medical



Absolute Maximum Ratings

	Symbol	Unit	min	typ	max	Measurement Conditions / Comments
Storage Temperature	T_S	°C	-40		85	non condensing
Operational Temperature at Case	T_C	°C	5		40	non condensing
Forward Current	I_F	A			13	Stress in excess of the Absolute Maximum Ratings can cause permanent damage to the device. Operation at the Absolute Maximum Rating for extended periods of time can adversely affect the device realibility and may lead to reduced operational life.
Reverse Voltage	V_R	V			0	
Output Power	P_{opt}	W			9	

Recommended Operational Conditions

	Symbol	Unit	min	typ	max	Measurement Conditions / Comments
Operational Temperature at Case	T_C	°C	15		30	measured at position A (see drawing on p. 3)
Forward Current	I_F	A			12	
Output Power	P_{opt}	W			8	

Characteristics at T_{amb} 25 °C at Begin Of Life

Parameter	Symbol	Unit	min	typ	max	Measurement Conditions / Comments
Center Wavelength	λ_C	nm	793	808	823	see images on page 4
Spectral Width (FWHM)	$\Delta\lambda$	nm			6	
Temperature Coefficient of Wavelength	$d\lambda / dT$	nm / K		0.4		
Output Power @ I_F = 12 A	P_{opt}	W	8			total output measured with integrating sphere
Slope Efficiency	η_d	W / A	0.7	0.9		
Threshold Current	I_{th}	A			2.5	

Distributor
amsTECHNOLOGIES
where technologies meet solutions
info@amstechnologies.com
www.amstechnologies-webshop.com
Contact us

BROAD AREA LASER

GaAs Semiconductor Laser Diode
Single Emitter Structure

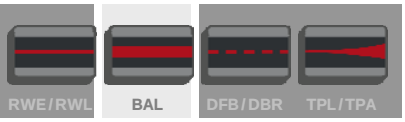

PRELIMINARY SPECIFICATION

BA Laser

EYP-BAL-0808-08000-4020-CMT04-0000

Characteristics at T_{amb} 25 °C at Begin Of Life

Parameter	Symbol	Unit	min	typ	max	Measurement Conditions / Comments
Operational Current @ P_{opt} = 8 W	I_{op}	A			12	
Stripe Width	W_s	µm		200		
Cavity Length	L	µm		4000		
Divergence parallel (FWHM)	$\Theta_{\parallel}$	°		10		
Divergence perpendicular (FWHM)	$\Theta_{\perp}$	°		30		
Spectral Mode (longitudinal)				Multi Mode		
Polarization				TM		Polarization in perpendicular plane

eagleyard Photonics GmbH
Rudower Chaussee 29 (IGZ)
12490 Berlin GERMANY
fon +49. 30. 6392 4520
fax +49. 30. 6392 4529
info@toptica-eagleyard.com
www.toptica-eagleyard.com

BROAD AREA LASER
GaAs Semiconductor Laser Diode
Single Emitter Structure

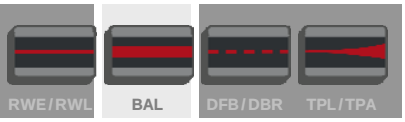

PRELIMINARY SPECIFICATION

BA Laser

EYP-BAL-0808-08000-4020-CMT04-0000

Package Dimensions

	Symbol	Unit	min	typ	max
Emission Plane	l	mm	7.05	7.20	7.35
C-Mount Thickness	d	mm		4	

Package Pinout

Cathode (-)	Mounting Wire
Anode (+)	Housing

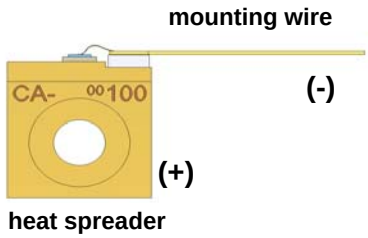

Package Drawings

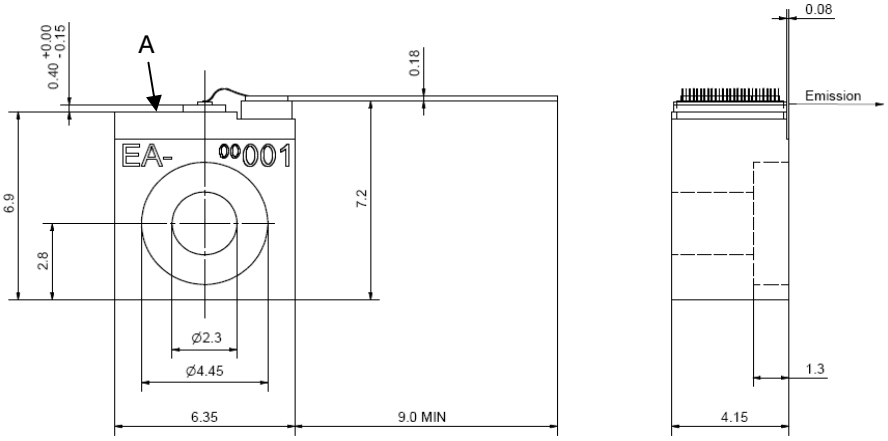

BROAD AREA LASER
GaAs Semiconductor Laser Diode
Single Emitter Structure

RWE/RWL | BAL | DFB/DBR | TPL/TPA

PRELIMINARY SPECIFICATION

BA Laser

EYP-BAL-0808-08000-4020-CMT04-0000

Typical Measurement Results

Spectrum at Specified Optical Output Power

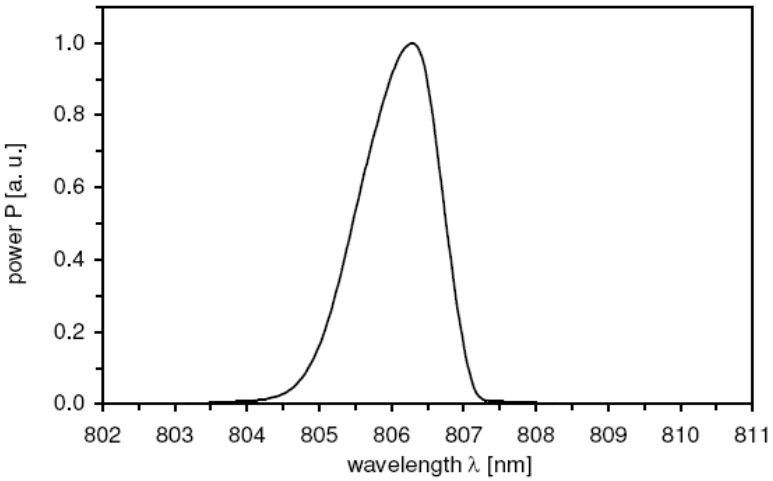

Performance figures, data and any illustrative material provided in this specification are typical and must be specifically confirmed in writing by eagleyard Photonics before they become applicable to any particular order or contract. In accordance with the eagleyard Photonics policy of continuous improvement specifications may change without notice.

Unpacking, Installation and Laser Safety

Unpacking the laser diodes should only be done at electrostatic safe workstations (EPA). Though protection against electro static discharge (ESD) is implemented in the laser package, charges may occur at surfaces. Please store this product in its original package at a dry, clean place until final use. During device installation, ESD protection has to be maintained.

The BAL diode type is known to be sensitive against thermal stress. Operating at moderate temperatures on propper heat sinks willl contribute to a long lifetime of the diode.

The laser emission from this diode is close to the invisible infrared region of the electromagnetic spectrum. Avoid direct and/or indirect exposure to the free running beam. Collimating the free running beam with optics as common in optical instruments will increase thread to the human eye.

Each laser diode will come with an individual test protocol verifying the parameters given in this document.

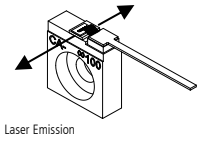
Laser Emission





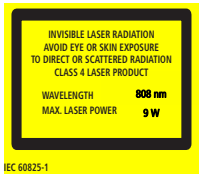





Complies with 21 CFR 1040.10 and 1040.40

Distributor
amsTECHNOLOGIES
where technologies meet solutions
info@amstechnologies.com
www.amstechnologies-webshop.com
Contact us

TOPTICA EAGLEYARD

EYP-BAL-0808-00025-2013-SOT23-0016

Revision 0.70

20.03.2019

MULTI MODE LASER DIODES
Broad Area Laser

General Product Information

Product	Application
808 nm Broad Area Laser	Sensing
for High Energy Pulse Mode Operation	
sealed TO Housing	



Absolute Maximum Ratings

Parameter	Symbol	Unit	min	typ	max	Measurement Conditions / Comments
Storage Temperature	T_S	°C	-40		85	Every condition of the Absolute Maximum Ratings has to be kept during operation
Operational Temperature at Case	T_C	°C	-20		80	
Peak Current	$I_{F\ Peak}$	A			22	see Pulse Mode Conditions
Reverse Voltage	V_R	V			2	
Peak Output Power	$P_{opt\ Peak}$	W			21	see Pulse Mode Conditions
Forward Voltage at Peak	V_F	V			4	see Pulse Mode Conditions

Recommended Operational Conditions

Parameter	Symbol	Unit	min	typ	max	Measurement Conditions / Comments
Operational Temperature at Case	T_C	°C	0		75	
Forward Current	$I_{F\ Peak}$	A			21	see Pulse Mode Conditions
Output Power	$P_{opt\ Peak}$	W		20		see Pulse Mode Conditions

Characteristics at 25° C at Begin Of Life

Parameter	Symbol	Unit	min	typ	max	Measurement Conditions / Comments
Center Wavelength	λ_C	nm	793	808	823	see Pulse Mode Conditions
Spectral Width (FWHM)	$\Delta\lambda$	nm		3		
Temperature Coefficient of Wavelength	$d\lambda / dT$	nm / K		0.3		
Peak Output Power @ I_F = 21 A	$P_{opt\ Peak}$	W		20		see Pulse Mode Conditions
Threshold Current	I_{th}	A		1.5		
Differential Series Resistance	R_S	Ω		0.07		

Distributor
amsTECHNOLOGIES
where technologies meet solutions
info@amstechnologies.com
www.amstechnologies-webshop.com
Contact us

EYP-BAL-0808-00025-2013-SOT23-0016

Revision 0.70

20.03.2019

MULTI MODE LASER DIODES
Broad Area Laser



Characteristics at 25° C at Begin Of Life cont'd

Parameter	Symbol	Unit	min	typ	max	Measurement Conditions / Comments
Dual Emitter Cavity Length	L	µm		2000		
Single Stripe Width	W_S	µm		130		
Spacing between Emitters	$W_{Spacing}$	µm		370		
Stripe Pitch	W_{Pitch}	µm		500		
Divergence parallel (FWHM)	$\Theta_{\parallel}$	°		10		
Divergence perpendicular (FWHM)	$\Theta_{\perp}$	°		30		
Polarization				TM		E field perpendicular to Pin 2 - Pin 3 - plane
Spectral Mode (longitudinal)				Multi Mode		

Pulse Mode Conditions

Parameter	Symbol	Unit	min	typ	max	Measurement Conditions / Comments
Pulse Length	t_p	µs		6.5		
Pulse Repetition Rate	RR	kHz		41.7		
Pulse Duration	t_{pp}	s		1.5		

© All rights reserved by eagleyard Photonics GmbH. This data sheet will be electronically administered and is subject to change without notice. Uncontrolled copy when printed.

EYP-BAL-0808-00025-2013-SOT23-0016

Revision 0.70

20.03.2019

MULTI MODE LASER DIODES
Broad Area Laser

Package Dimensions

Parameter	Symbol	Unit	min	typ	max	Measurement Conditions / Comments
Height of Emission Plane	d_{EP}	mm		3.65		reference plane A: top side of TO header
Excentricity of Emission Center	R	mm			0.15	reference B: center of outer diameter of header
Pin Length	l	mm		14.0		

Pin Assignment

1	Laser Diode Anode, Case
2	not connected
3	Laser Diode Cathode

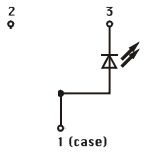

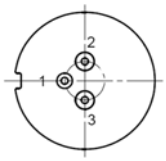

Package Drawings

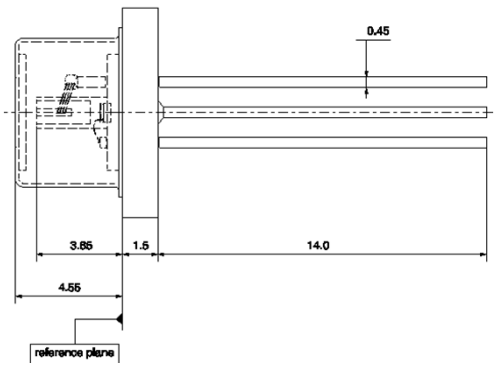

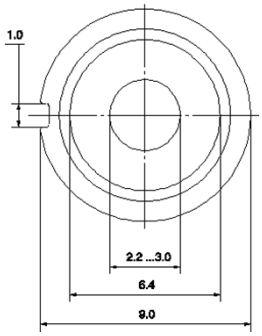

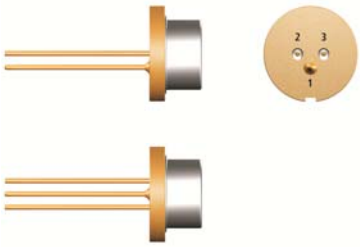

© All rights reserved by eagleyard Photonics GmbH. This data sheet will be electronically administered and is subject to change without notice. Uncontrolled copy when printed.

EYP-BAL-0808-00025-2013-SOT23-0016

Revision 0.70

20.03.2019

MULTI MODE LASER DIODES
Broad Area Laser

Typical Measurement Results

Spectrum

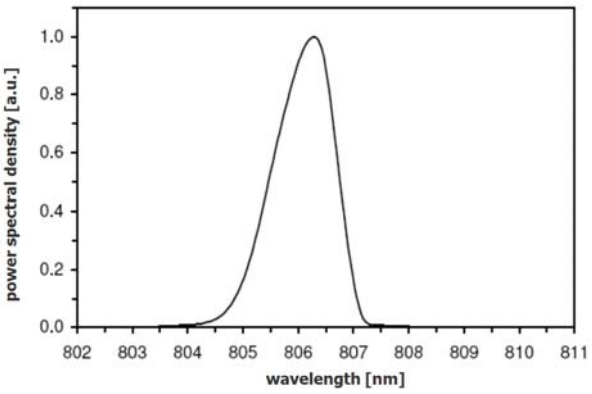

Performance figures, data and any illustrative material provided in this specification are typical and must be specifically confirmed in writing by eagleyard Photonics before they become applicable to any particular order or contract. In accordance with the eagleyard Photonics policy of continuous improvement specifications may change without notice.

Unpacking, Installation and Laser Safety

Unpacking the laser diodes should only be done at electrostatic safe workstations (EPA). Though protection against electro static discharge (ESD) is implemented in the laser package, charges may occur at surfaces. Please store this product in its original package at a dry, clean place until final use. During device installation, ESD protection has to be maintained.

The BAL diode type is known to be sensitive against thermal stress. Operating at moderate temperatures on propper heat sinks willl contribute to a long lifetime of the diode.

The laser emission from this diode is close to the invisible infrared region of the electromagnetic spectrum. Avoid direct and/or indirect exposure to the free running beam. Collimating the free running beam with optics as common in optical instruments will increase threat to the human eye.

Each laser diode will come with an individual test protocol verifying the parameters given in this document.

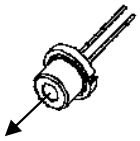

Laser Emission





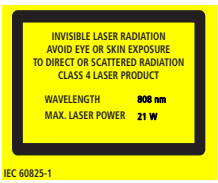



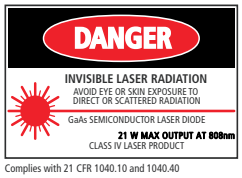

Complies with 21 CFR 1040.10 and 1040.40

Distributor
amsTECHNOLOGIES
where technologies meet solutions
info@amstechnologies.com
www.amstechnologies-webshop.com
Contact us